BMW

R nine T - SSEC GT Both Sides

2017 till now

Mufflers suitable for:

BMW R nine T - Pure
BMW R nine T - Urban G/T
BMW R nine T - Racer
BMW R nine T - Scrambler

BMW R nine T

For BMW R nine T , you need to order the BOS Adjust knob

Silencer attached to main frame with dismounted pillion passenger frame.

Approval Number

E13 92R-01 10409 TYPE 1022

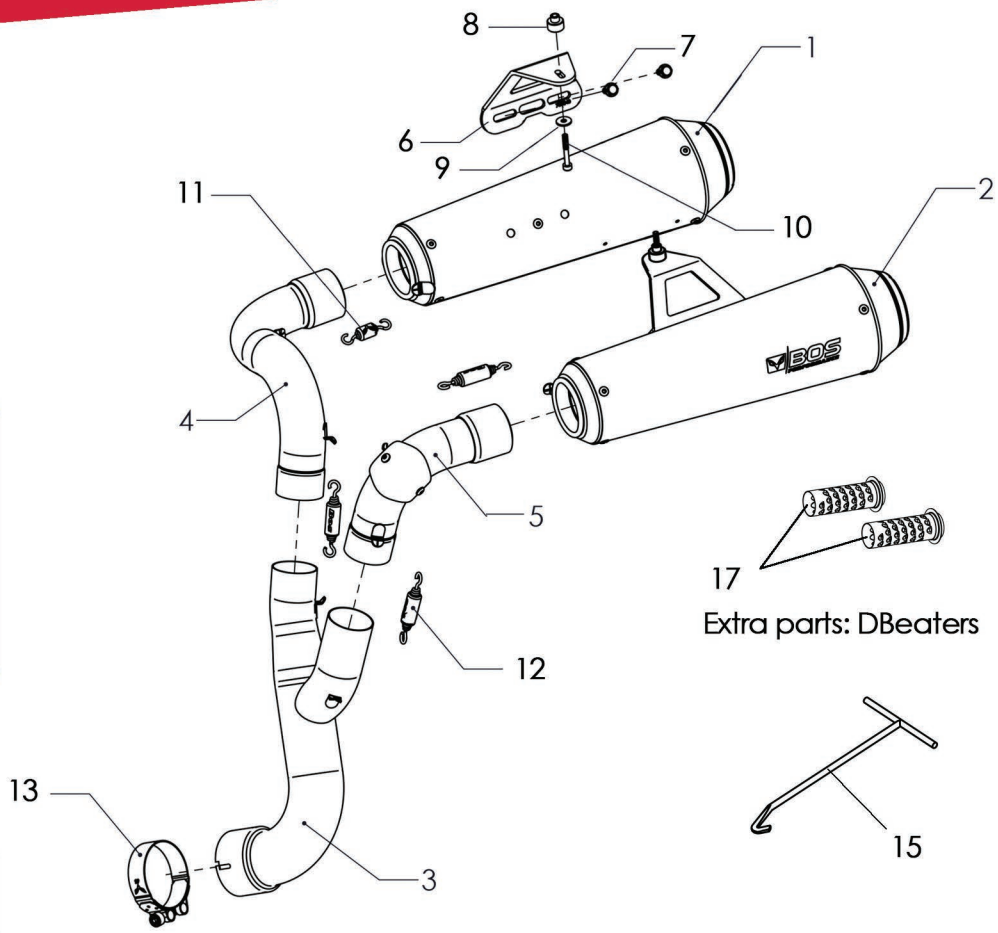

Pos	Qty	Part No.	Description
1	1	900083	Muffl. SSEC GT Type 1022 Carbon steel
2	1	900087	Muffl. SSEC GT Type 1022 Carbon Steel
1*	1	900098	Muffl. SSEC GT Type 1022 Stainless Steel
2*	1	900099	Muffl. SSEC GT Type 1022 Stainless Steel
		850028	**Mounting Parts:**
3	1	750024 #1	Link Pipe #1
4	1	750024 #2	Link Pipe #2
5	1	750024 #3	Link Pipe #3
6	2	700040	Mounting Bracket
7	4	14148	M6x12 Torx Flange Screw
8	2	300035	Spacer
9	2	300039	M5 Washer large
10	2	300038	Bolt M5x35
11	1	300032	Pull Spring 25 mm.
12	3	14088	Pull Spring 36 mm.
13	1	300014	Clamp 67
14	1	100030	Sound Approval Card
15	1	300040	Spring Pulling Tool
		850033	**Extra mounting part for "*R nine T*"**
16*	1	300044	BOS Adjust knob

Extra Parts:

17	2	650118	DBeater SSEC-GT D38

Ordernumber

BM09R07-SECS - Carbon Steel
BM09R07-SEST - Stainless Steel

Weight:

Stock:	4,6 kg (Scrambler)
Bos:	5,0 kg

Noiselevel: @ 3875 rpm

Stock:	Specified	90,0 dB(A)
	Measured	89,6 dB(A)
Bos:	Measured	90,6 dB(A)

Performance

Stock: 115,8 Hp / 7255 rpm
Bos: 120,2 Hp / 7250 rpm
Max. Hp incr.: + -, - Hp / - - - - rpm
Max Nm incr.: + - ,- Nm / - - - - rpm

Tips

In order to avoid smudges and fingerprints burning into the surface it is imperative to clean the exhaust before starting the engine, burnt in stains are very difficult to remove.
After 300 miles or 500 kms. check all nuts and bolts and retighten if necessary.